Exit-Less, Isolated, and Shared Access for Virtual Machines

Kenichi Yasukata
Hajime Tazaki
Pierre-Louis Aublin

Internet Initiative Japan

Project Web Page

https://github.com/yasukata/ELISA

- Paper
- Slides
- Source code
- Commentary

Memory Sharing for VMs

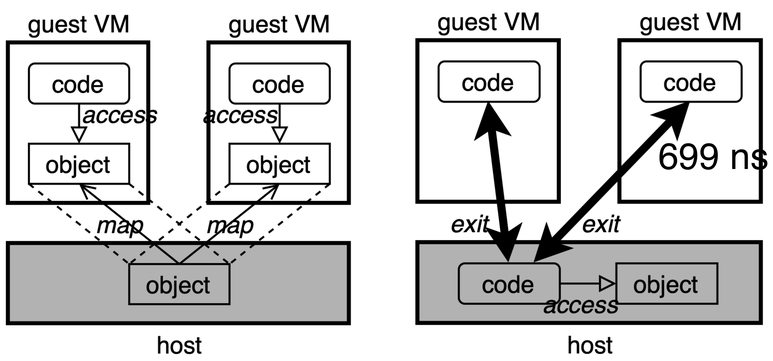

Direct-mapping Host-interposition

Problem Statement

Description	Shared access	Isolation overhead
Direct-mapping	No isolation	None
Host-interposition	Isolated	High
ELISA (this work)	Isolated	Low

- The existing schemes cannot offer isolation and low overhead at once
- This work aims to provide isolated shared access at a low overhead

EPTP Switching by VMFUNC

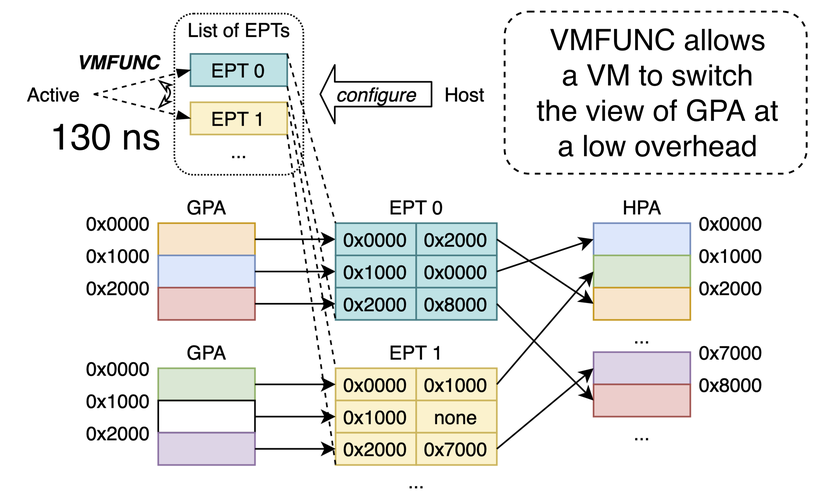

Solution: ELISA

3.5x faster than host-interposition

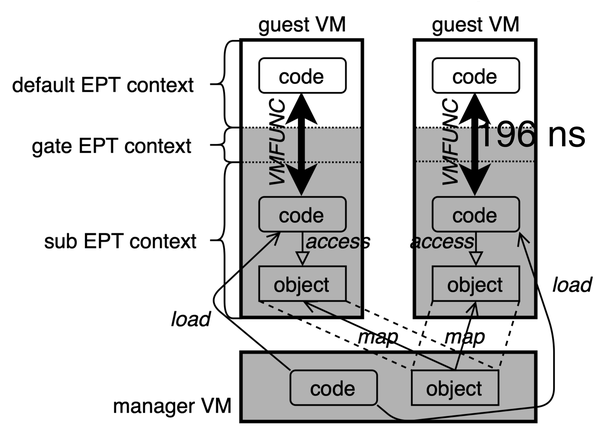

Use Case: Virtual I/O System

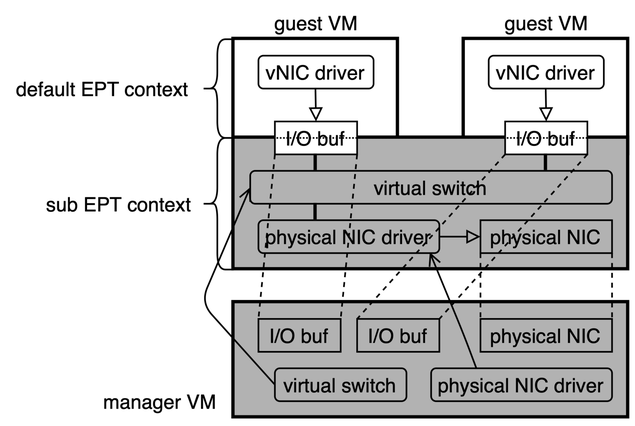

ELISA-based VM networking system

Performance

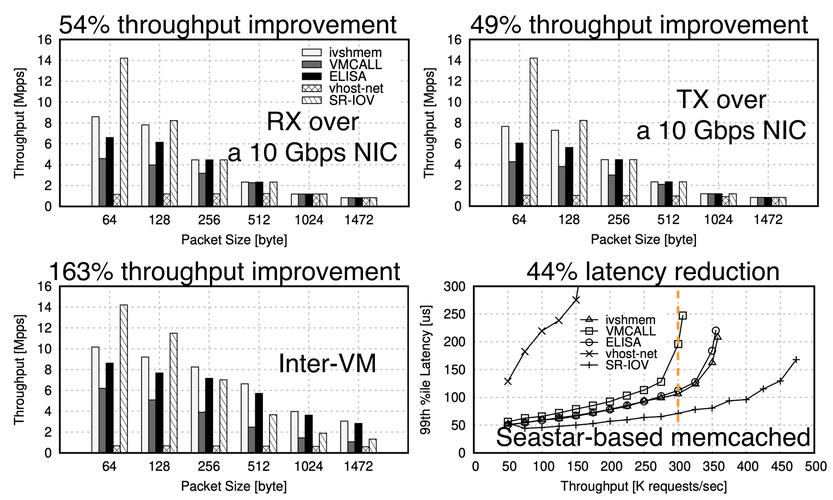

Page Table Maintenance Cost

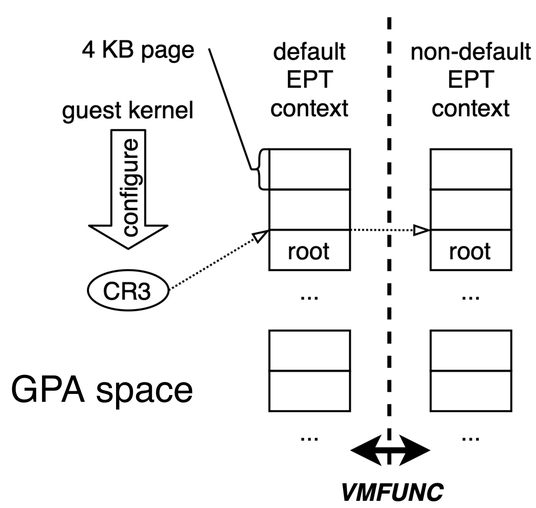

Potential Attack

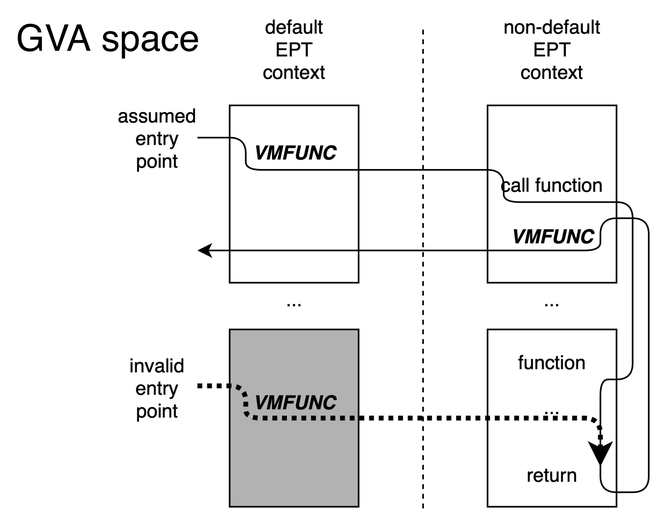

Anywhere Page Table

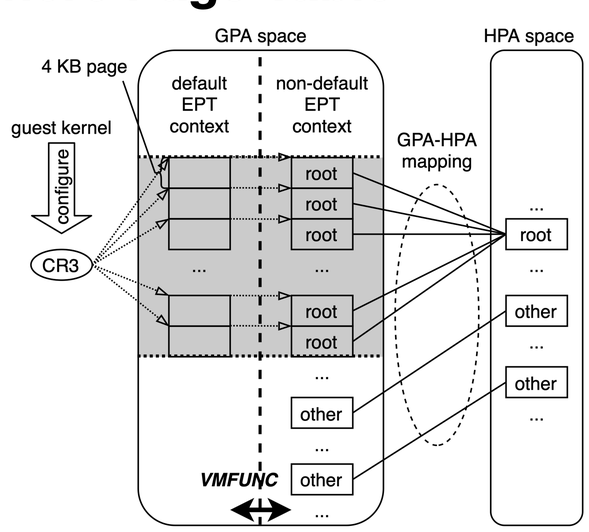

Gate EPT Context

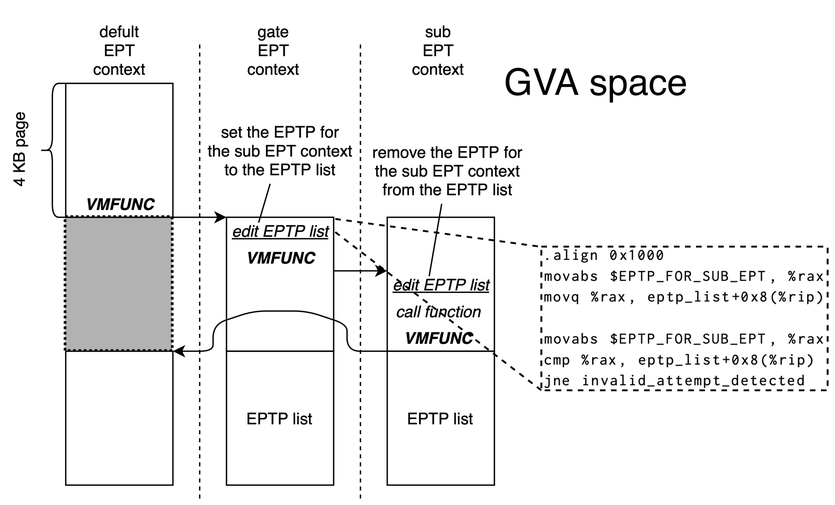

Exit-Less, Isolated, and Shared Access for Virtual Machines

Kenichi Yasukata
Hajime Tazaki
Pierre-Louis Aublin

Internet Initiative Japan

Memory Sharing for VMs

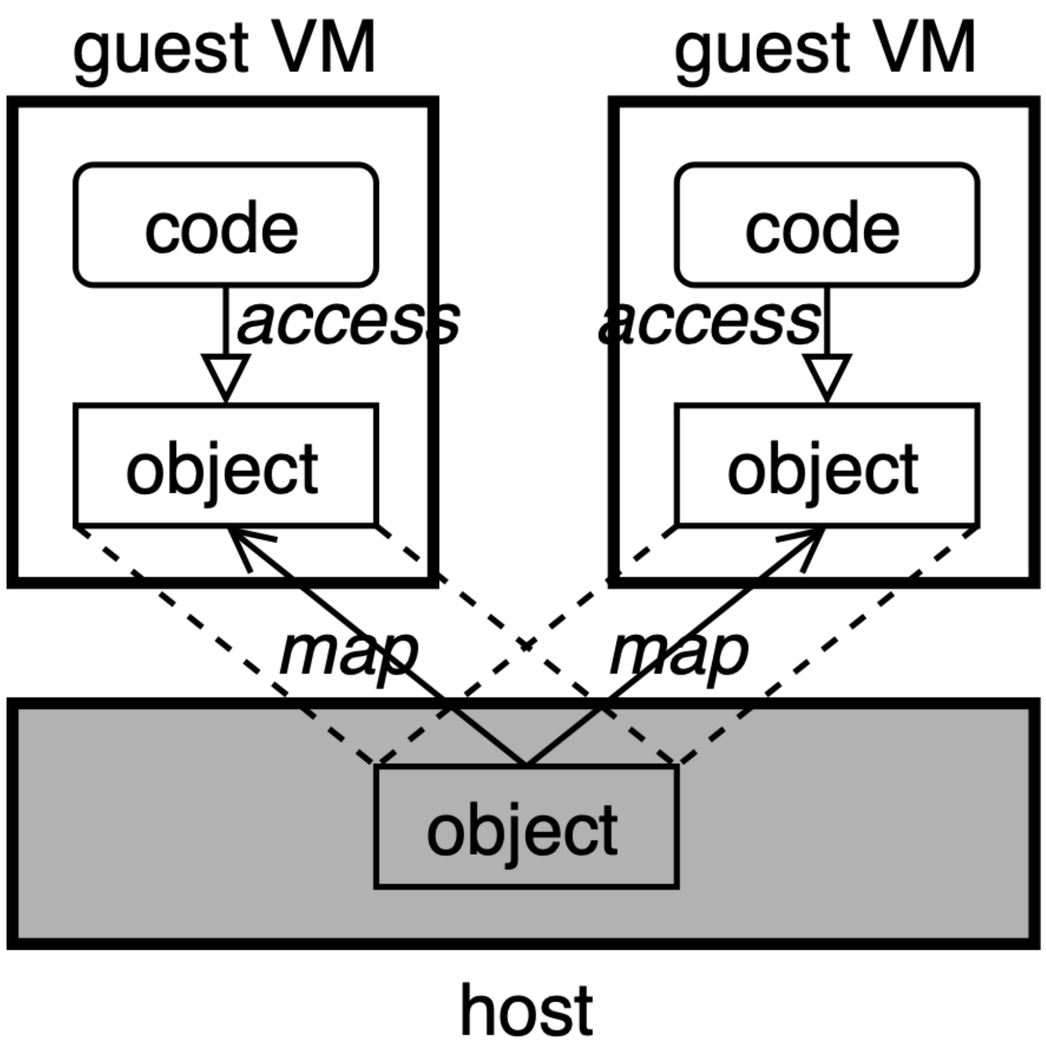

Direct-mapping

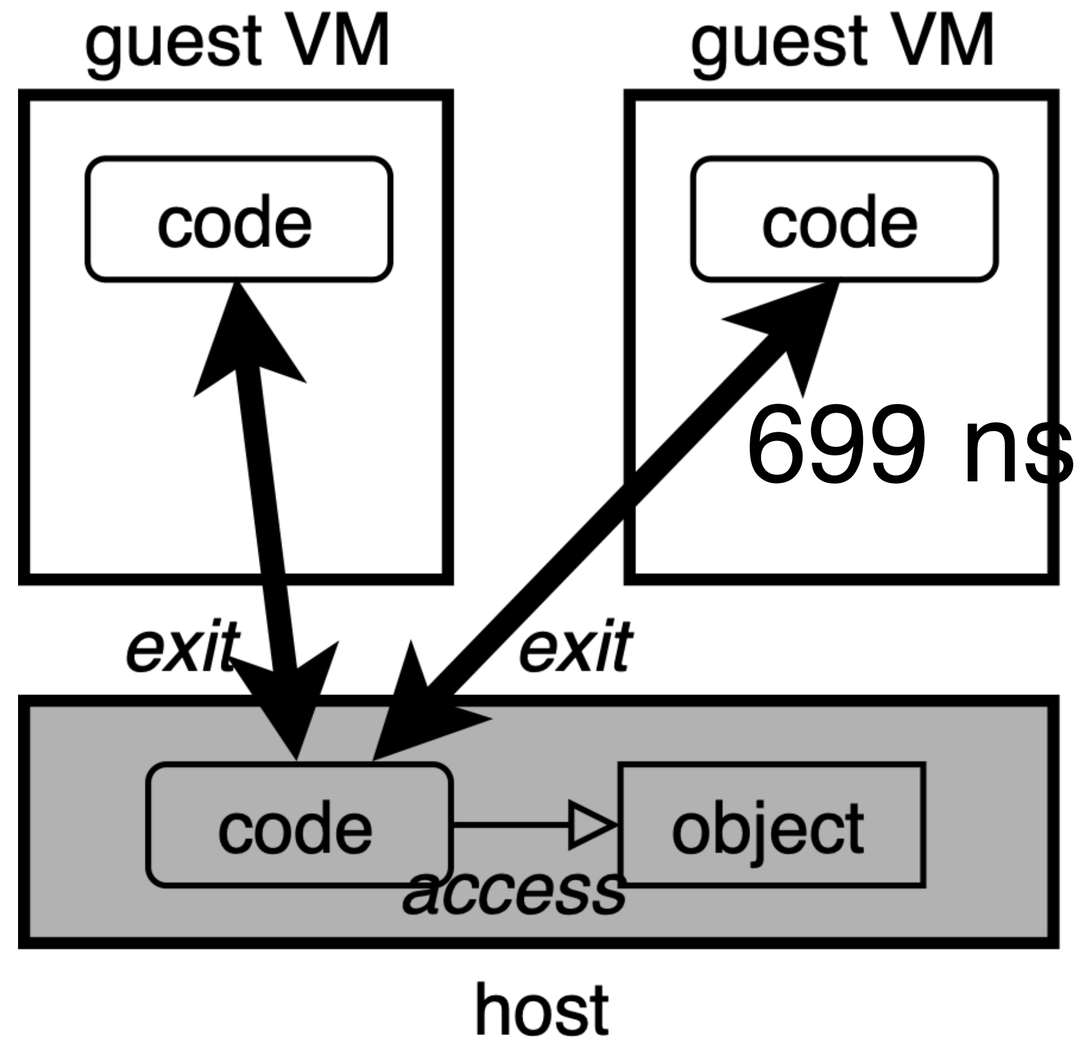

Host-interposition

Problem Statement

Description	Shared access	Isolation overhead
Direct-mapping	No isolation	None
Host-interposition	Isolated	High
ELISA (this work)	Isolated	Low

- The existing schemes cannot offer isolation and low overhead at once
- This work aims to provide isolated shared access at a low overhead

EPTP Switching by VMFUNC

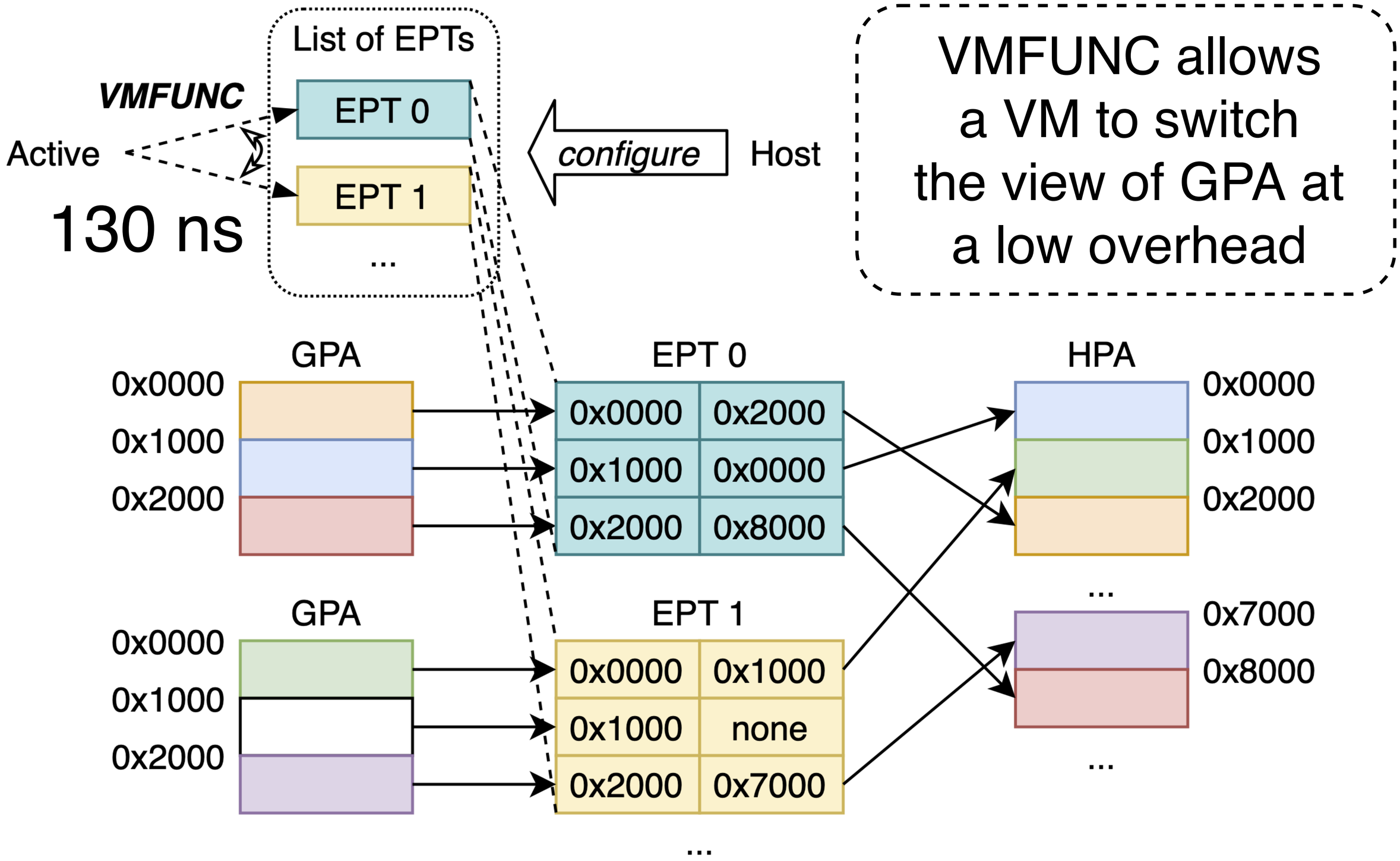

Solution: ELISA

3.5x faster than host-interposition

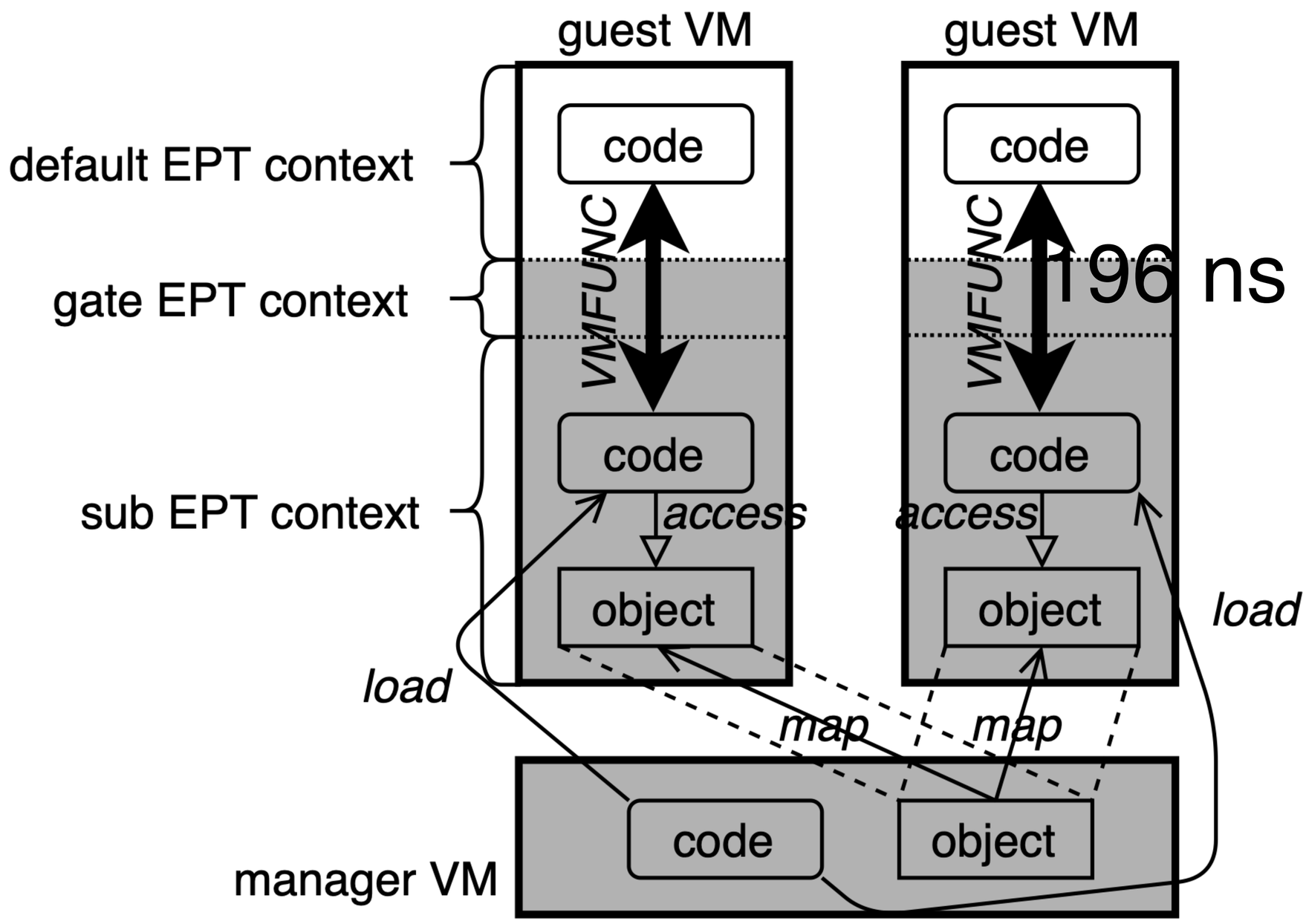

Use Case: Virtual I/O System

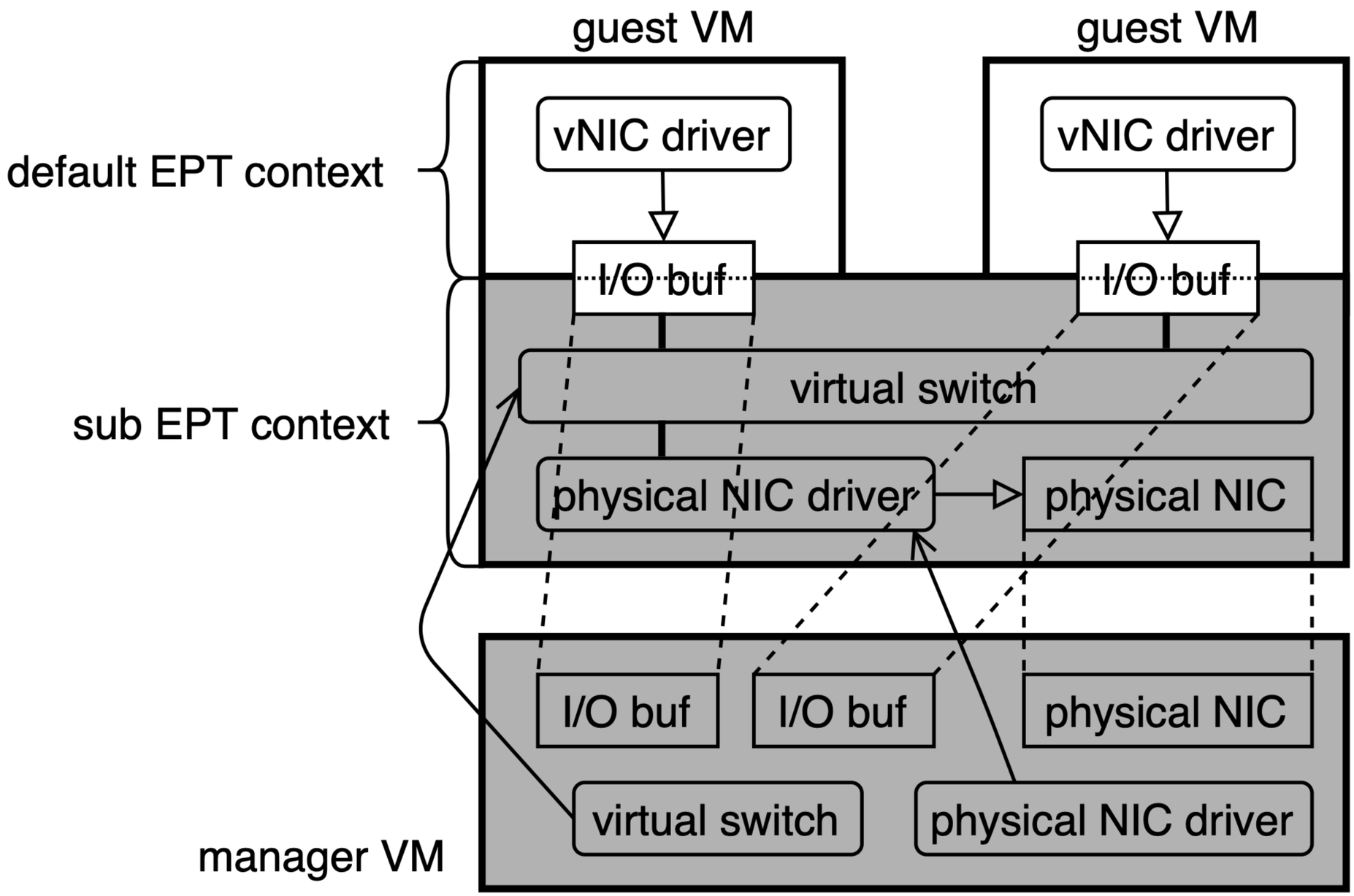

ELISA-based VM networking system

Performance

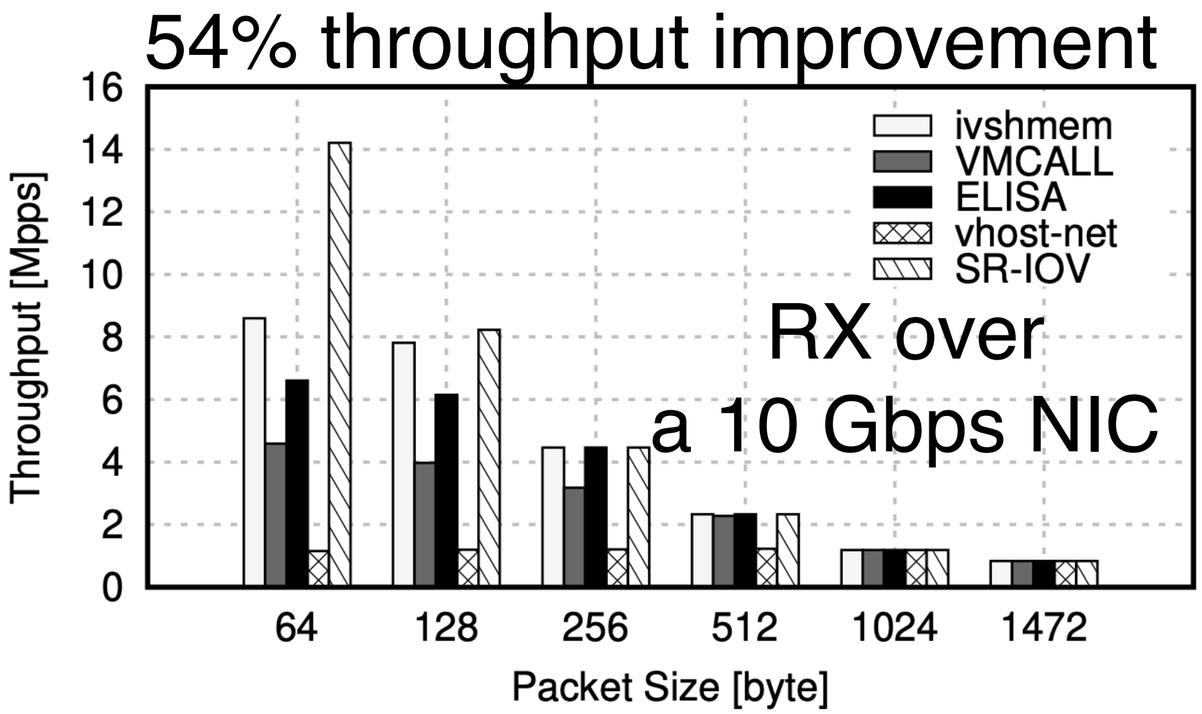

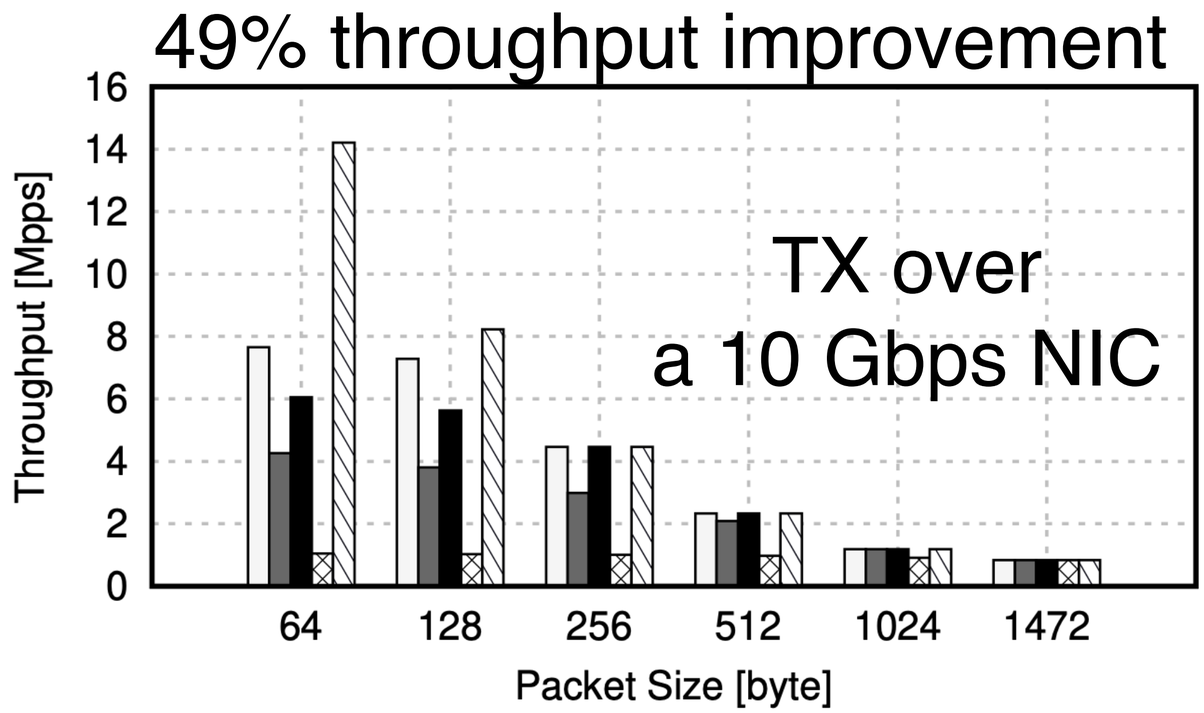

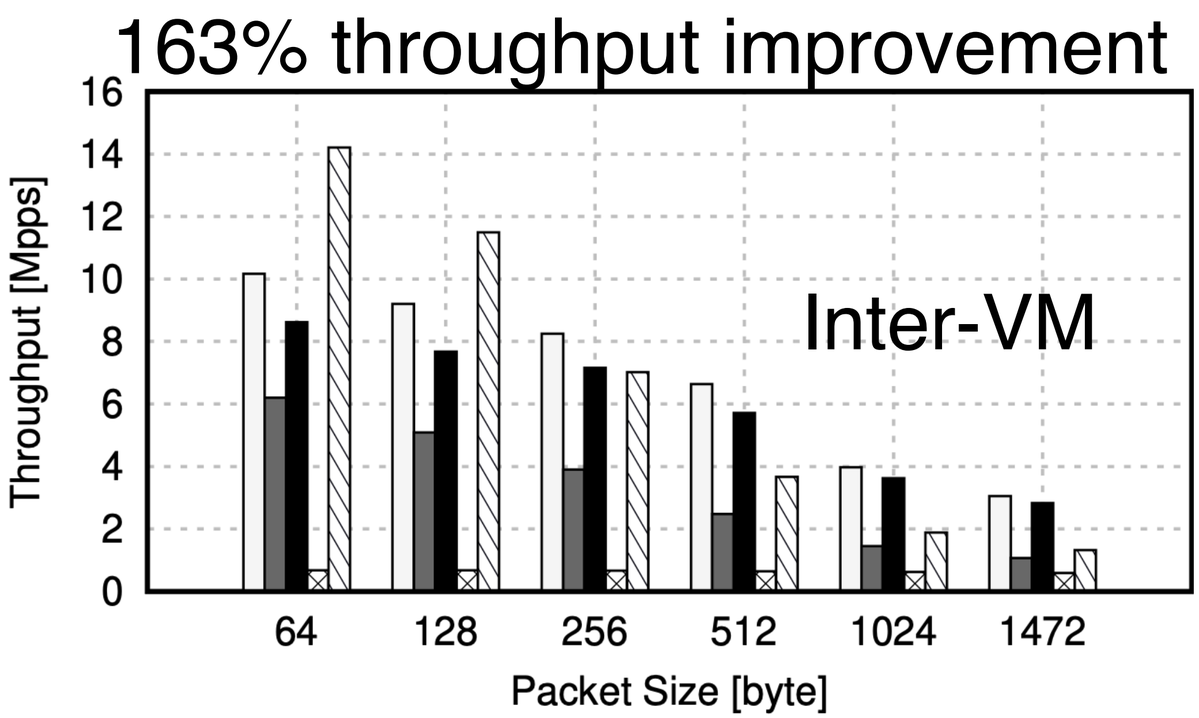

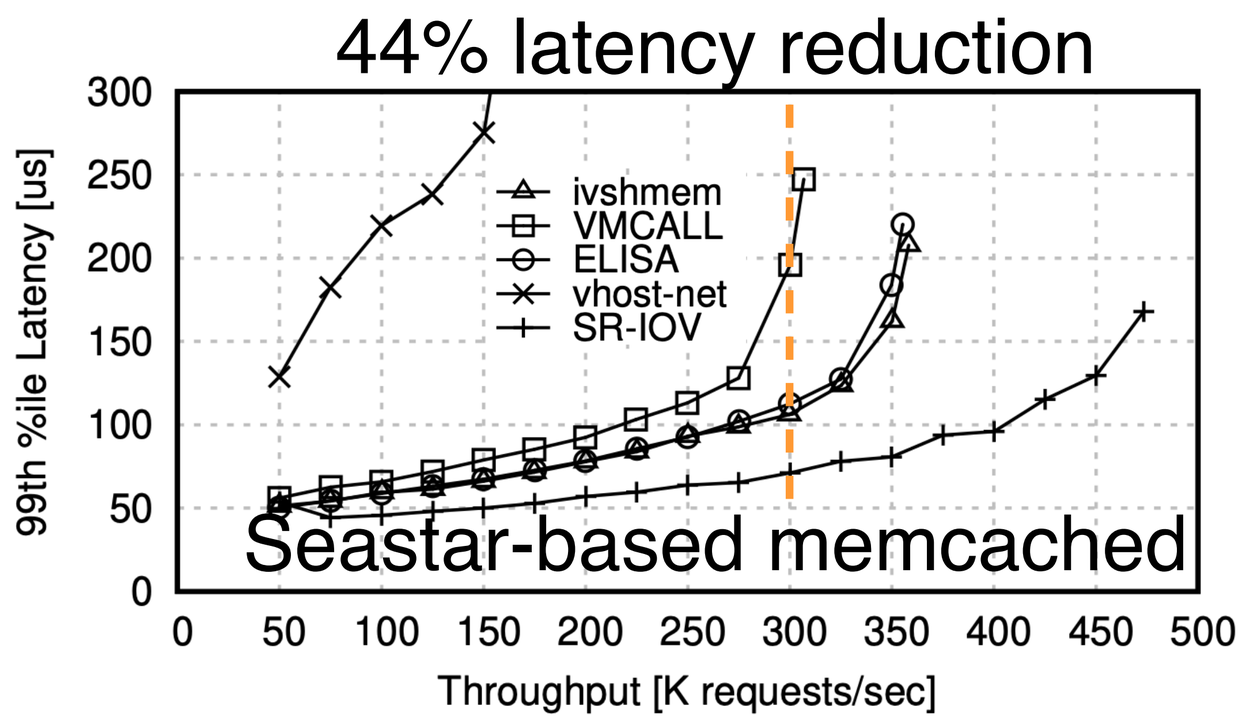

Project Web Page

https://github.com/yasukata/ELISA

- Paper
- Slides
- Source code
- Commentary

Page Table Maintenance Cost

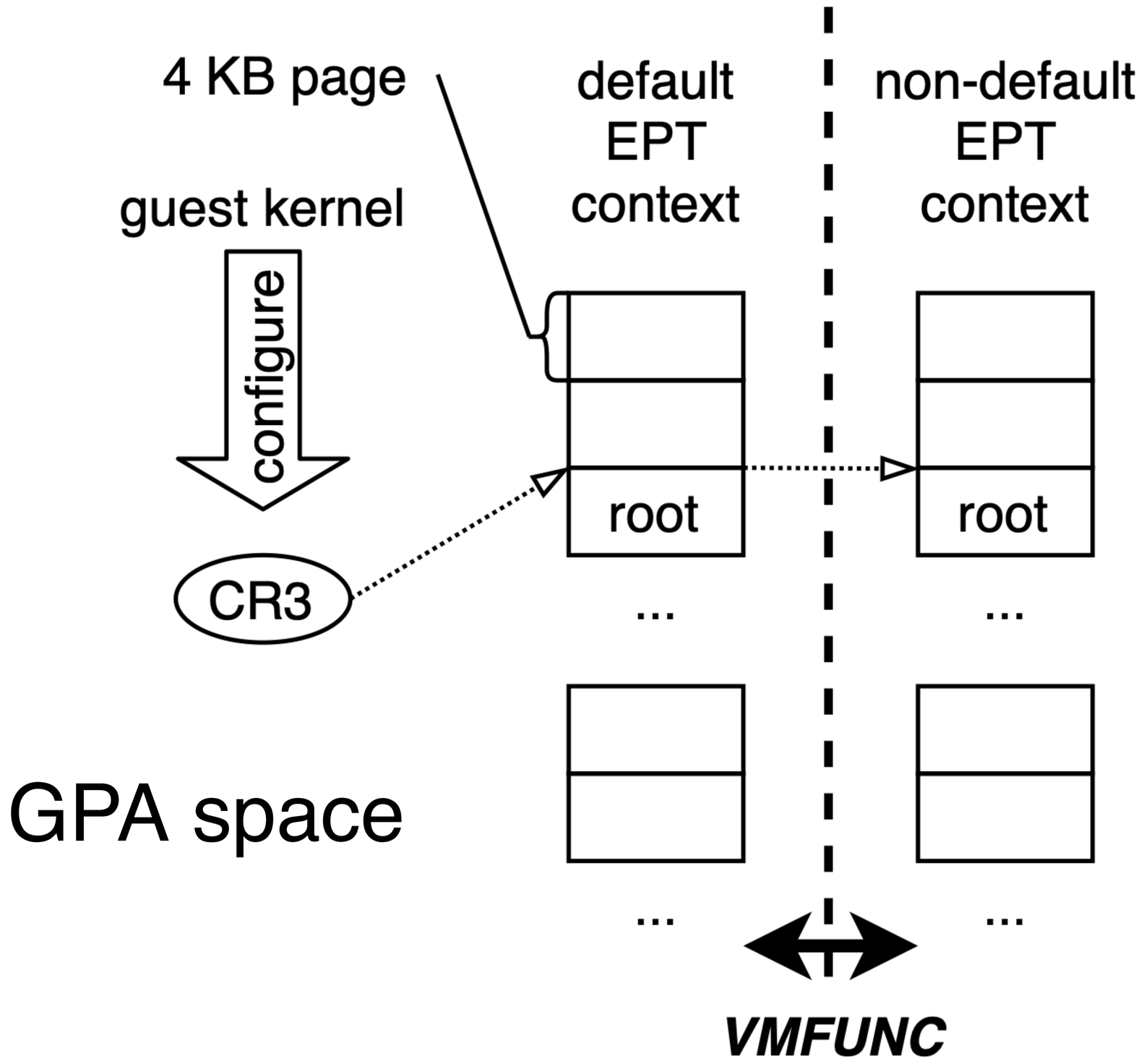

Anywhere Page Table

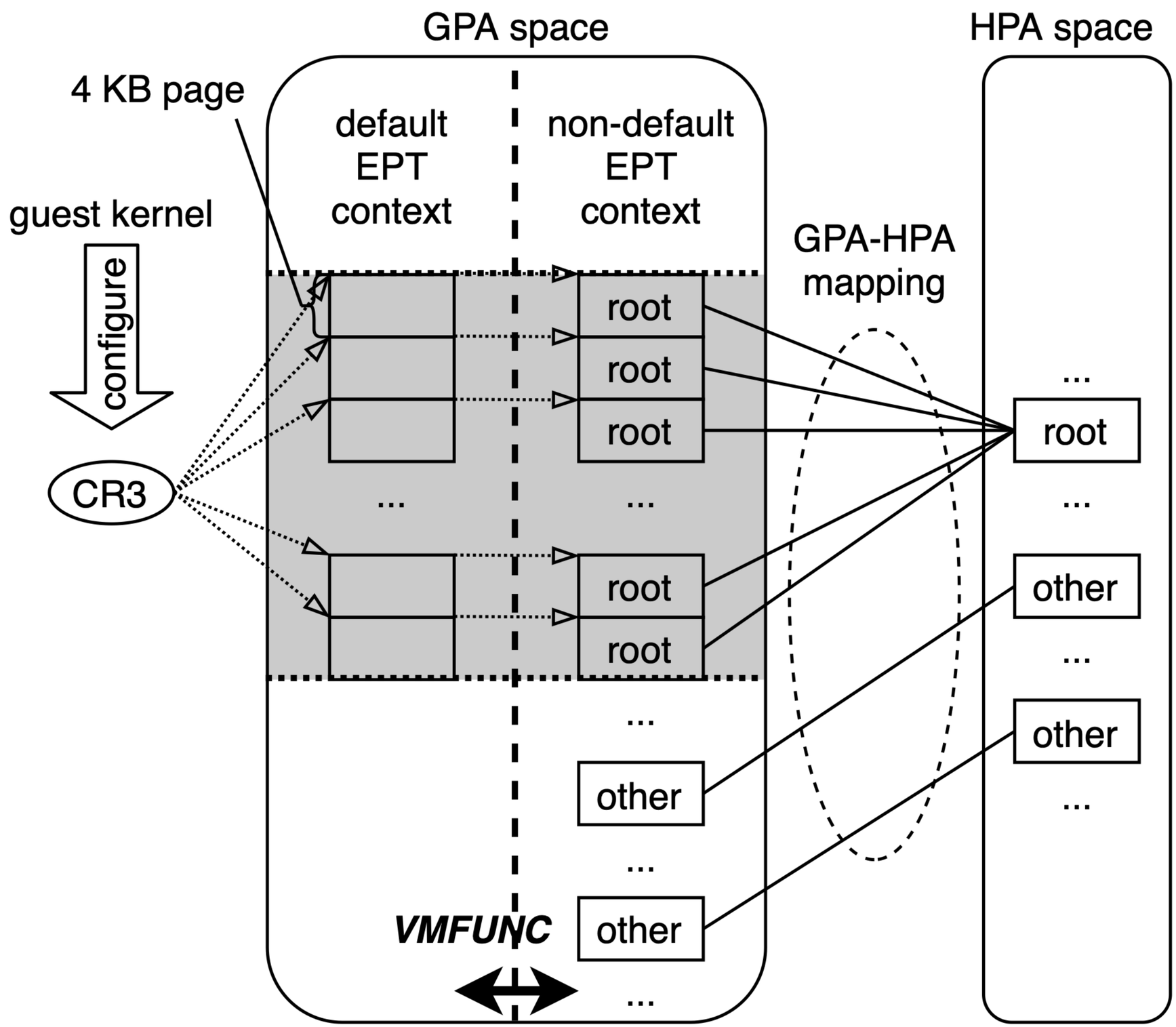

Potential Attack

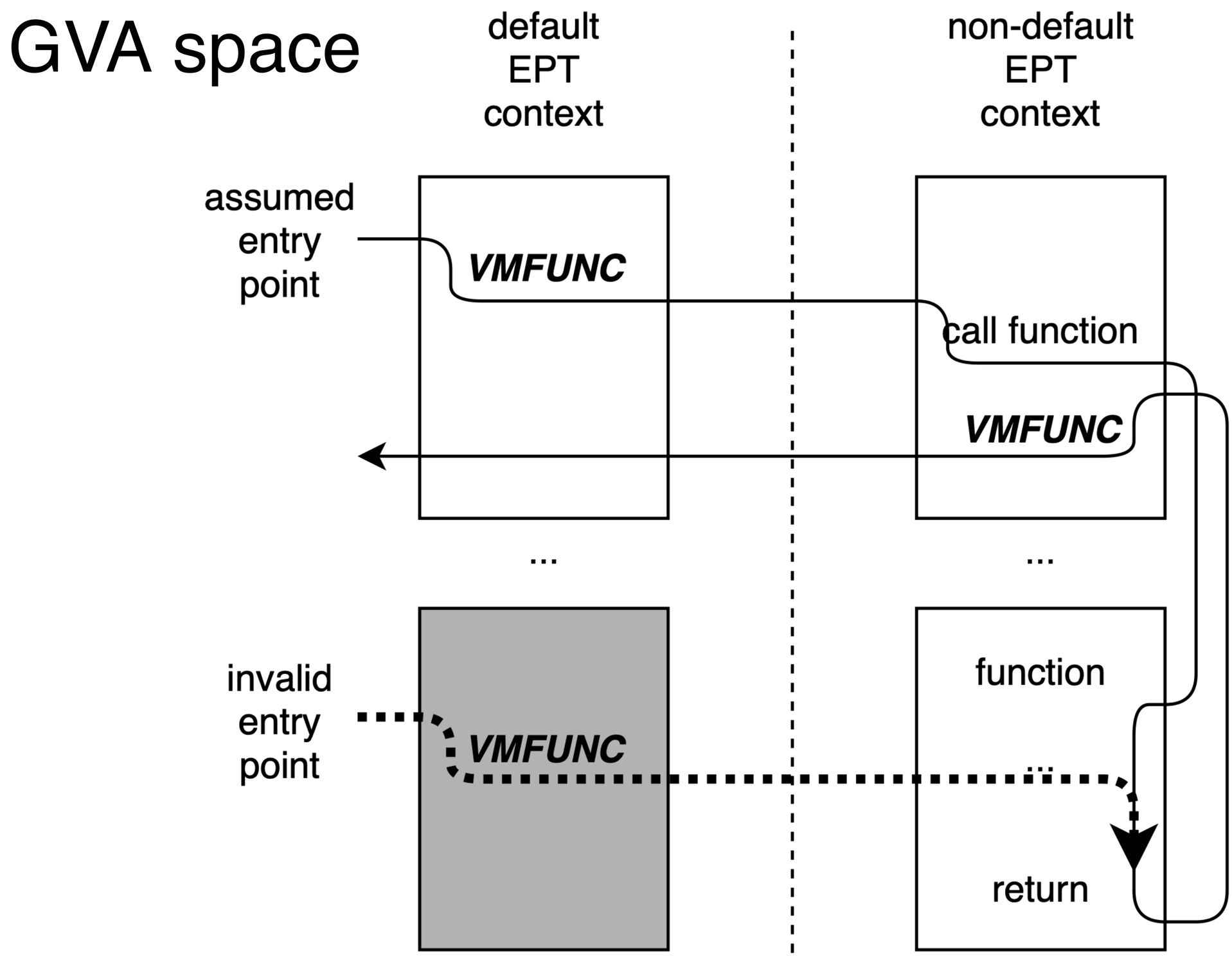
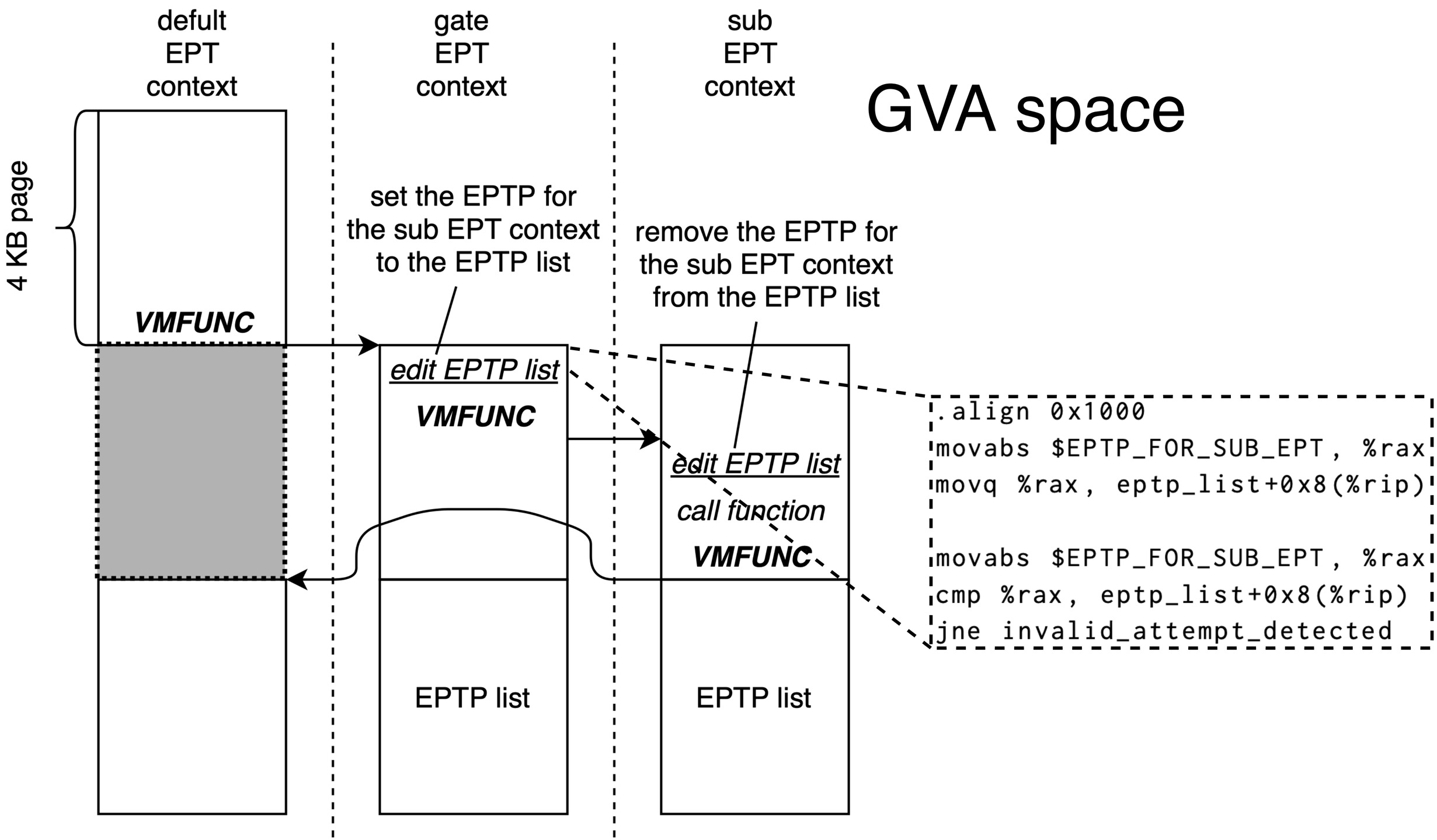
Gate EPT Context